Wilcoxon Research

Model 788A
General purpose accelerometer

Features
- Corrosion resistant
- Hermetic seal
- Ground isolated
- ESD protection
- Reverse wiring protection
- High performance to cost ratio

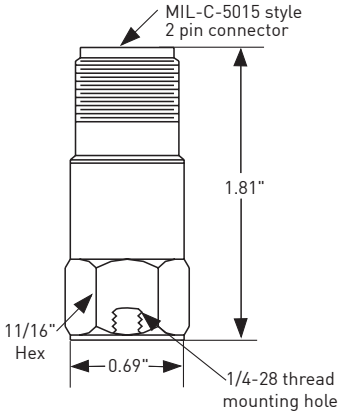

Dynamic

Sensitivity, ±10%, 25°C	100 mV/g
Acceleration range	50 g peak
Amplitude nonlinearity	1%
Frequency response:[1]	
±10%	3 - 8,000 Hz
±3 dB	1.5 - 12,000 Hz
Resonance frequency[1]	25 kHz
Transverse sensitivity	2% of axial
Temperature response	
-50°C	–7%
+120°C	+7%

Electrical

Power requirement: voltage source	18 - 30 VDC
current regulating diode	2 - 10 mA
Electrical noise, equiv. g:[1]	
Broadband 2.5 Hz to 25 kHz	230 µg
Spectral 10 Hz	20 µg/√Hz
100 Hz	4 µg/√Hz
1000 Hz	1.4 µg/√Hz
Output impedance, max.	100 Ω
Bias output voltage	12 VDC
Grounding	case isolated, internally shielded

Environmental

Temperature range	–50 to 120°C
Vibration limit	500 g
Shock limit, min.	5,000 g
Electromagnetic sensitivity, equiv. g, max	50 µg/gauss
Sealing	Hermetic
Base strain sensitivity, max	0.0004 g/µstrain

Physical

Sensing element design	PZT ceramic / flexure
Weight	45 grams
Case material	316L stainless steel
Mounting	1/4 - 28 UNF tapped hole
Output connector	2 pin, MIL-C-5015 style
Mating connector[2]	R6, R6Q
Recommended cabling	J10 / J9T2A

Connector pin	Function
Shell	ground
A	power/signal
B	common

Notes: [1] Typical value
[2] R6SL will not seal on 788A and is not recommended

Accessories supplied: SF6 mounting stud (International customers specify mounting requirements); calibration data (level 3)

Wilcoxon Research Inc
21 Firstfield Rd
Gaithersburg, MD 20878
USA

Tel: 301 330 8811
Fax: 301 330 8873
Email: sensors@wilcoxon.com

www.meggitt.com

MEGGITT
smart engineering for
extreme environments

98922 Rev.A.2 11/05